CITY OF PATTERSON PLANNING COMMISSION AGENDA
REGULAR MEETING
THURSDAY, MARCH 12, 2026, AT 7:00 P.M.
City Council Chambers
1 Plaza, Patterson, California

PUBLIC MEETING GUIDELINES

City of Patterson Planning Commission meetings are conducted in person at City Hall Council Chambers. As a courtesy, and technology permitting, members of the public may continue to participate virtually. However, the City cannot guarantee that the public's access to teleconferencing technology will be uninterrupted, and technical difficulties may occur from time to time.

MEMBERS OF THE PUBLIC MAY PARTICIPATE IN THE MEETING IN PERSON OR VIA TELECONFERENCE BY CALLING 1-669-900-6833, MEETING ID: 701 906 1477 PASSWORD: 20995363 AND WILL BE GIVEN THE OPPORTUNITY TO PROVIDE PUBLIC COMMENT. JOIN FROM A PC, MAC, IPAD, IPHONE, OR ANDROID DEVICE BY USING THIS URL:

https://us06web.zoom.us/j/7019061477?pwd=VEIrMTIYdmNZTk53ZitzZUdSZUQxZz09

Planning Commission meetings will be available for public viewing daily on Comcast cable channel 7, or online via the following link: https://vimeo.com/channels/patterson/

Regular Planning Commission meetings are scheduled on the 2nd and 4th Thursday of each month at 7:00 p.m. January-October and on the 3rd Thursday only in November and December. The agenda/packet is usually posted by 5:00 p.m. the Thursday before a scheduled Thursday Planning Commission meeting.

In compliance with the Americans with Disabilities Act, if you need special assistance to participate in this meeting, please contact the Planning Department at (209) 895-8020. Notification 48 hours prior to the meeting will enable the City to make reasonable arrangements to ensure accessibility to this meeting. [28 CFR 35.102-35.104 ADA Title II].

The Planning Commission agenda and supporting public documents are available for viewing in City Hall, Planning Department, 1 Plaza, 2nd Floor, Patterson, California, during normal business hours. The Planning Commission agenda and supporting public documents are also available online on the City web site www.pattersonca.gov listed under Agenda Center "Planning Commission" or please call or email the Planning Department at (209) 895-8020 or planning@pattersonca.gov

If you wish to be notified of future Planning Commission meetings, please visit our website www.pattersonca.gov go to Popular Links "Planning Commission Agendas" and Subscribe to "RSS"

CALL TO ORDER

PLEDGE OF ALLEGIANCE

ROLL CALL

ITEMS FROM THE PUBLIC The public wishing to address the Planning Commission on items that do not appear on the agenda may do so; however, the Planning Commission will take no action other than referring the item to Staff for study and analysis and may place the item on a future agenda [Resolution 92-25].

Any member of the audience desiring to address the Planning Commission regarding a matter on the agenda, please raise your hand or step to the podium at the time the item is announced by the Chairperson. In order

that all interested parties have an opportunity to speak, any person addressing the Planning Commission will be limited to a maximum of three (3) minutes unless the Chairperson grants a longer period of time.

STATEMENT OF CONFLICT BY COMMISSIONERS

RIGHT TO APPEAL Any person who is dissatisfied with the decision of the Planning Commission may appeal such action to the City Council within ten (10) business days after action.

CORRESPONDENCE None

CONSENT AGENDA

1. Planning Commission Regular Meeting Minutes of December 18, 2025.
2. Planning Commission Regular Meeting Minutes of February 12, 2026.

AGENDA ITEMS

Public Hearing: **Architectural & Site Plan Review #24-06, Conditional Use Permit #24-03, 111 E. Las Palmas Avenue, APN #047-033-011 - J's Food Court**
A public hearing to consider Architectural and Site Plan Review and Conditional Use Permit (CUP) approval of a proposed mobile vehicle food court, including up to 13 mobile vehicle spaces, gazebo structures, trash enclosure, parking spaces, and related facilities, at 111 E. Las Palmas Ave (APN 047-033-011), east of 1st St. The southwest portion of the site is developed with an existing auto sales building and car lot. The remainder of the site is undeveloped with two mobile food truck vendors**)**

- **ITEMS FROM STAFF**
- **ITEMS FROM COMMISSION**
- **ADJOURNMENT**

CITY OF PATTERSON
PLANNING COMMISSION MINUTES
DECEMBER 18, 2025

The Planning Commission regular meeting of December 18, 2025, was called to order by Chairperson West at 7:01 p.m.

SHOWN PRESENT (HYBRID MEETING): Shown present: Chairperson West, Vice Chairperson Bendix, Commissioner Apland, Commissioner Sidhu and Commissioner Alexander. Also shown present were: Community Development Director Stice, City Planner Andrews, IT Support Technician II Lane Valenzuela, Videographer Justin Danner and Planning Commission Secretary Melo. Shown excused: Associate Planner Rodriguez.

ROLL CALL: Chairperson West, Vice Chairperson Bendix, Commissioner Apland, Commissioner Sidhu, Commissioner Alexander

ITEMS FROM THE PUBLIC:

Hi there. I am unable to attend the meeting due to work and was hoping you could read my comments under public comment time. My name is Yolanda Magaña resident of Patterson, CA. I wanted to bring up that I hope planning commissioners are abstaining from voting when it comes to decisions that could be financially beneficial to them. Such as if a commissioner is a realtor, broker, developer, contractor, land owner, architect, engineer, land use consultant, Attorneys specializing in Land Use or Property Law, or other professions or other areas of personal interest that they could have a financial benefit that could foreseeably be impacted by their voting decision. With Patterson growing as it is, I want to make sure our public leaders aren't having any conflicts of interests with voting on any new developments. Thank you for your time.

STATEMENT OF CONFLICT BY COMMISSIONERS: Chairperson West will excuse himself from item #4 630 N. 4th St. Four-plex

CORRESPONDENCE: Received a comment letter from Department of Housing & Community Development (HCD) regarding City of Patterson 6th Cycle 2023-2031 Housing Element

Chairperson West asked staff to explain the correspondence received from HCD regarding the Housing Element. Community Development Director Stice and City Planner Andrews explained the Housing Element process.

CONSENT AGENDA: None

AGENDA ITEMS:

Public Hearings related to recommendation to City Council for three development agreements for the Zacharias and Baldwin Ranch South Master Plan as follows:

1. **Development Agreement for Zacharias Project with developers Zacharias Ranch, TPF Development, and Lakeside Hills for residential parcels.**

The Planning Commission will consider a recommendation to the City Council related to an ordinance for a Development Agreement between the City of Patterson and Zacharias Ranch, TPF Development and Lakeside Hills. This agreement would apply to residential parcels of real property located in the Zacharias Area of the Master Plan. The project covers approximately 618.2 acres and would add approximately 3,941 new residential units to the City of Patterson. The proposed agreement is a Master Development Agreement intended to memorialize shared benefits, representations, warrants and obligations of the parties related to the Zacharias Project Area. This agreement provides vested rights to the Developers, establishes certain financial and infrastructure obligations for the development of the Project and reduces the economic risk of the Project for both the City and the Developers. Subsequent project-level development agreement may be required for each Developer.

Community Development Director Stice stated that legal staff recommended to continue the Development Agreement to the Planning Commission meeting on January 22nd.

Open Public Hearing: 7:10 p.m.

No public testimony

Close Public Hearing: 7:11 p.m.

Motion to continue Development Agreement for Zacharias Residential to January 22nd Planning Commission meeting:

By: Vice Chairperson Bendix
Second: Commissioner Apland
Motion passed: 5-0 Vote

ROLL CALL: Chairperson West, Vice Chairperson Bendix, Commissioner Apland, Commissioner Sidhu, Commissioner Alexander

Ayes: Chairperson West, Vice Chairperson Bendix, Commissioner Apland, Commissioner Sidhu, Commissioner Alexander
Noes: None
Excused: None

2. **Development Agreement for Zacharias Commercial and Industrial Project with developers Zacharias Ranch and Lakeside Hills.**

The Planning Commission will consider a recommendation to the City Council related to an ordinance for a Development Agreement between the City of Patterson and Zacharias Ranch and Lakeside Hills. This agreement would apply to commercial and industrial parcels of real property located in the Zacharias Area of the Master Plan. The project covers approximately 367.9 acres and would add approximately 7,765,000 sq. feet of commercial, light industrial, and mixed-use buildings to the City. The proposed agreement is a Master Development Agreement intended to memorialize shared benefits, representations, warrants and obligations of the parties related to the Zacharias Commercial and Industrial Project Area. This agreement provides vested rights to the Developers, establishes certain financial and infrastructure obligations for the development of the Project and reduces the economic risk of the Project for both the City and the Developers. Subsequent project-level development agreement may be required for each Developer's development area.

Community Development Director Stice stated that legal staff recommended to continue the Development Agreement to the Planning Commission meeting on January 22nd.

Open Public Hearing: 7:12 p.m.

No public testimony

Close Public Hearing: 7:13 p.m.

Motion to continue Development Agreement Zacharias Commercial/Industrial to January 22nd Planning Commission meeting:

By: Vice Chairperson Bendix
Second: Commissioner Sidhu
Motion passed: 5-0 Vote

ROLL CALL: Chairperson West, Vice Chairperson Bendix, Commissioner Apland, Commissioner Sidhu, Commissioner Alexander

Ayes: Chairperson West, Vice Chairperson Bendix, Commissioner Apland, Commissioner Sidhu, Commissioner Alexander
Noes: None
Excused: None

3. **Development Agreement for Baldwin Ranch South Project with developer Baldwin Ranch South.**

The Planning Commission will consider a recommendation to the City Council related to an ordinance for a Development Agreement between the City of Patterson and Baldwin Ranch South. This agreement would apply to residential parcels of real property located in the Baldwin Ranch South area of the Master Plan. The project covers approximately 66 acres and would add approximately 305 new residential units to the City. The proposed agreement is intended to memorialize shared benefits, representations, warrants and obligations of the parties related to the Baldwin Ranch South Project Area. This agreement provides vested rights to the Developer, establishes certain financial and infrastructure obligations for the development of the Project and reduces the economic risk of the Project for both the City and the Developer.

Community Development Director Stice stated that legal staff recommended to continue the Development Agreement to the Planning Commission meeting on January 22nd.

Open Public Hearing: 7:14 p.m.

No public testimony

Close Public Hearing: 7:15 p.m.

Motion to continue Development Agreement for Baldwin Ranch South to January 22nd Planning Commission meeting:

By: Vice Chairperson Bendix
Second: Commissioner Apland
Motion passed: 5-0 Vote

ROLL CALL: Chairperson West, Vice Chairperson Bendix, Commissioner Apland, Commissioner Sidhu, Commissioner Alexander

Ayes: Chairperson West, Vice Chairperson Bendix, Commissioner Apland, Commissioner Sidhu, Commissioner Alexander
Noes: None
Excused: None

Chairperson West excused himself and wished everyone a wonderful holiday. Vice Chairperson Bendix took over the meeting as chairperson.

4. **Public Hearing:** **Architectural & Site Plan Review #25-06, Conditional Use Permit #25-09 – 630 N. 4th Street Four-plex, APN # 047-021-010**
An application to allow a residential building with four units at 630 N. 4th Street with two units of 1,561 square feet and two units of 1,583 square feet. All units would be part of a single two-story building, oriented to face North 4th Street. Multiple-family units housing projects, such as the proposed project, are subject to the approval of a conditional use permit in the Downtown Residential zone, where the project is proposed. The project site measures 18,295 square feet and is currently vacant.

Community Development Director Stice introduced City Planner Andrews to present the PowerPoint presentation for the project. City Planner Andrews stated that the Planning Commission received a petition from neighbors regarding the concerns about the project's potential impacts regarding parking, traffic, infrastructure and consistency with the character of the surrounding neighborhood. The signees requested that the Planning Commission deny the project. He answered questions from the Commission.

Carl Thompson, applicant for the project, 1919 Grand Canal Blvd, Stockton, CA
Mr. Thompson spoke in favor of the project and described it to the Commission. He noted the petition that was circulated and he became aware of it on Monday but wanted more time to address concerns with petitioners. He's aware of concerns but stated that this project helps with the housing element, and he has addressed concerns with mitigating second story windows and privacy for neighbors. He stated that petitioner's concerns would be addressed the best he could. He answered questions from the Commission.

Open Public Hearing: 7:31 p.m.

Dominic Farinha, past member of City Council and resident of Patterson
Mr. Farinha stated that he's not opposed to housing in general but he made comments on how the project is designed. He is concerned with parking, traffic impacts and trash pickup, and is concerned this project would set a precedent for future multi-family projects in the area. He asked the commissioners to consider other conditions to reduce impacts while allowing the project to move forward.

Monica Della Maggiore, 431 N. 4th Street, Patterson
Mrs. Della Maggiore asked how many feet the project was noticed because she lives close by. Staff stated that the legal requirement is a 300' notification. She spoke about the history of the area and stated that the proposed project would change the area. She also stated that she was surprised that a project of that size would be allowed on N. 4th Street. She asked if the units would be for sale or rent. City Planner Andrews stated that they were proposed for rentals.

Cassondra Powers, lives next door to 630 N. 4th Street
Mrs. Powers stated that she's opposed to the project because most families lived there for decades and the character of the block reflects the area. She stated that she purchased her home because it was single-family. She stated that the street already brings traffic from Hwy 33 and the schools and multi-housing would increase traffic, congestion and safety for surrounding homes. She was also concerned about future property value. She asked the Commission to deny the project as proposed.

Sand Keller-Borba, Patterson resident
Mrs. Keller-Borba stated that she is a 47-year resident of N. 4th Street and her parents are the original owners. She spoke about the history of N. 4th Street. She urged the Commission to consider the issues that this project would bring and not approve the conditional use permit.

Monica Della Maggiore, 431 N. 4th Street, Patterson
Mrs. Della Maggiore stated that she bought in the neighborhood because of the character of it. She stated that it would take years for full grown trees to grow or landscaping around the 4-plex and it would feel sterile.

Elisa Medina, 700 N. 3rd Street, Patterson
Mrs. Medina stated that she bought 6 years ago because of the architecture of single-story homes that have been there for years and for the quiet, wide streets. She stated that she would be able to see the four-plex from her kitchen and 12 garbage totes. She asked if there would be monitoring for the garbage cans to be put away, and wondered if people would even park in their garage. She was also concerned about who would be moving into the area. She stated that she opposes the conditional use permit.

John Christopherson, corner of Northmead and N 4th Street
Mr. Christopherson stated that he would have to look at a giant building and it would wreck the whole neighborhood. He stated that he lives there because it's single-family and private and the four-plex is not a good fit for the neighborhood. He also was concerned with excessive parking in the neighborhood if the project goes through.

Adrian Goss, 615 N. 4th Street, Patterson
Mr. Goss filed the petition and stated that he doesn't agree with the conformity of the proposed project because it doesn't look like anything on the street. He also stated that it would have a negative impact on the values in the neighborhood. He was concerned that the back half of the lot would get built out as well and add to the concerns already stated. Mr. Goss stated that they didn't have enough time to address all concerns in the petition because they got the notice about the meeting last Tuesday.

Kandace Weyhrauch, Patterson resident
Mrs. Weyhrauch stated that she doesn't live in the neighborhood, but she wanted to speak on behalf of her friends that live in the neighborhood. She stated that changing the dynamic of the neighborhood is wrong. She noted that the traffic is horrible on M Street and 4th Street and it's not right to add 4 more units on one lot. She urged the Commission to not approve the conditional use permit.

Marco, Patterson resident
He stated that he doesn't live in the area but had questions and concerns about the proposed project including the garbage cans and car placement in front of the 4-plex. He asked if the soil had been checked due to the fire and whether there is contamination. City Planner Andrews stated that soil testing would take place if the project was approved. He stated that street is in a flood zone. He also stated that the building is nice and he likes houses that are more affordable, but he stated that apartment complexes aren't the answer.

Dominic Farinha
Mr. Farinha asked if any consideration had been given for a large single-family home and ADU to allow for other housing opportunities instead of the massive 4-plex He felt there could be a happy medium to provide a different housing style but not the proposed housing project.

Hugo Gonzalez, neighbor
Mr. Gonzalez doesn't think the project is a good idea and he's against it.

Chad Hubin, 620 N. 4th Street
Mr. Hubin bought property because it was a single-family home. The easement is there because he gave the previous owner the easement so he could get into his backyard not for multiple people using his driveway. He stated that he opposes the project.

John Powers
Mr. Powers stated that his wife voiced her concerns previously, but he was concerned about the amount of trash cans that will be out front on Wednesdays, and everyone has at least two cars so lots of cars in the area and it's in front of his house. He is strongly opposed and hopes the Commission makes the right decision.

Close Public Hearing: 8:06 p.m.

Commissioners spoke about the project and voiced their concerns. They asked staff questions.

Motion to deny Architectural & Site Plan Review 25-06 and Conditional Use Permit 25-09:

By:	Commissioner Apland
Second:	Commissioner Alexander
Motion passed:	4-0 Vote

ROLL CALL: Vice Chairperson Bendix, Commissioner Apland, Commissioner Sidhu, Commissioner Alexander

Ayes:	Vice Chairperson Bendix, Commissioner Apland, Commissioner Sidhu, Commissioner Alexander
Noes:	None
Excused:	None
Abstained:	Chairperson West

ITEMS FROM STAFF:

Community Development Director Stice stated that city hall will be closed starting on Monday and will reopen on January 5th.

ITEMS FROM COMMISSION:

Vice Chairperson Bendix asked about letter going to Save Mart and Community Development Director Stice said it hadn't been sent out yet.

ADJOURNMENT: The Planning Commission regular meeting of December 18, 2025, was adjourned by Vice Chairperson Bendix at 8:13 p.m.

_____
Prepared by Denise Melo, Secretary of City of Patterson Planning Commission

CITY OF PATTERSON
PLANNING COMMISSION MINUTES
FEBRUARY 12, 2026

The Planning Commission regular meeting of February 12, 2026, was called to order by Chairperson West at 7:01 p.m.

SHOWN PRESENT (HYBRID MEETING): Shown present: Chairperson West, Vice Chairperson Bendix, Commissioner Apland, Commissioner Sidhu and Commissioner Alexander. Also shown present were: Community Development Director Stice, IT Support Technician II Lane Valenzuela, Videographer Justin Danner and Planning Commission Secretary Melo. Shown excused: City Planner Andrews and Associate Planner Rodriguez.

ROLL CALL: Chairperson West, Vice Chairperson Bendix, Commissioner Apland, Commissioner Sidhu, Commissioner Alexander

ITEMS FROM THE PUBLIC: None

STATEMENT OF CONFLICT BY COMMISSIONERS: None

CORRESPONDENCE: None

CONSENT AGENDA:

Motion to approve Planning Commission Meeting Minutes of November 20, 2025

By: Vice Chairperson Bendix
Second: Commissioner Apland
Motion passed: 5-0 Vote

ROLL CALL: Chairperson West, Vice Chairperson Bendix, Commissioner Apland, Commissioner Sidhu, Commissioner Alexander

Ayes: Chairperson West, Vice Chairperson Bendix, Commissioner Apland, Commissioner Sidhu, Commissioner Alexander
Noes: None
Excused: None
Abstained: None

Motion to approve special Planning Commission Meeting Minutes of December 1, 2025

By: Vice Chairperson Bendix
Second: Commissioner Sidhu
Motion passed: 5-0 Vote

ROLL CALL: Chairperson West, Vice Chairperson Bendix, Commissioner

Apland, Commissioner Sidhu, Commissioner Alexander

Ayes: Chairperson West, Vice Chairperson Bendix, Commissioner Apland, Commissioner Sidhu, Commissioner Alexander
Noes: None
Excused: None
Abstained: None

AGENDA ITEMS:

1. **Public Hearing:** **Tentative Parcel Map #26-01 – Eagle Valley Investments, S. Rogers Road, APN #'s 021-093-004, 021-093-006, 021-093-007**
The project consists of a Tentative Parcel Map to subdivide three existing parcels (Assessor's Parcel Numbers 021-093-004, 021-093-006, and 021-093-007), totaling approximately 16 acres, located along Sperry Avenue and Rogers Road, into eleven (11) parcels. The proposed parcels would range in size from approximately one (1) to two (2) acres and are intended for future commercial development. The parcels are zoned General Commercial District. The project is exempt from the California Environmental Quality Act (CEQA) pursuant to CEQA Guidelines Section 15315 (Minor Land Divisions), as the proposal involves the subdivision of property in an urbanized area and does not include any construction or expansion of use at this time. Any future development of the subdivided parcels will be subject to separate discretionary review and environmental analysis, as required.

Community Development Director Stice presented the PowerPoint presentation. He answered questions from the Commission.

Open Public Hearing: 7:20 p.m.

Larry Buehner, Eagle Valley Investments
Mr. Buehner stated that staff did a great job explaining the tentative parcel map. He stated that the old tentative map expired during the pandemic and then changes were made to bring this new tentative parcel map back to the Commission.

Close Public Hearing: 7:22 p.m.

Motion to approve Tentative Parcel Map #26-01 with eleven findings and 18 conditions of approval:
By: Vice Chairperson Bendix

Conditions of Approval

1. That the project shall be subject to the mitigation measures outlined in the West Patterson Business Park EIR and Addendum.

2. That the final map submitted for checking and recordation shall be prepared by a licensed civil engineer or land surveyor, each licensed to practice in the state of California, and shall meet all of the specifications of the state Subdivision Map Act.

3. That the parcels shall comply with the requirements of the General Commercial zoning classification.

4. That, prior to final map submittal, the applicant/developer shall submit to the City Engineer a driveway access plan that utilizes the necessary number of shared, City-commercial-standard driveways to mitigate potential impacts to S. Rogers Road that could occur otherwise because of the proposed increased number of lots.

5. That the approval shall comply with all applicable state and municipal codes and meet the requirements of the City Engineer.

6. That easements of record shall remain in effect and shall be recorded on the final map.

7. That an access easement and agreement shall be prepared to the satisfaction of the City Engineer and recorded for any lots/parcels that either share driveways as per the required driveway access plan (above) or that do not have direct access to the public right-of-way.

8. Public utility easements shall be granted as required by the appropriate companies and to the satisfaction of the Public Works Director and City Engineer.

9. The applicant shall file one copy of the Tentative Parcel Map to be used for assigning addresses.

10. That no non-conforming condition of zoning may be created by this approval.

11. Cost of all inspections related to on-site and off-site improvements shall be paid by the subdivider/developer.

12. In addition to payment of required development impact fees, developers of each parcel shall be responsible for their fair share of costs, as determined by the City Engineer, related to the improvement of Rogers Road and Sperry Avenue.

13. The subdivider shall set all monuments required by the Subdivision Map Act before project acceptance for off-site improvements are approved.

14. The applicant shall comply with the requirements of the San Luis & Delta-Mendota Water Authority (SLDMWA) as set forth in their comment letter dated February 2, 2026, which is incorporated herein by reference, and shall obtain all necessary permits and approvals prior to issuance of grading or building permits for any work adjacent to or affecting the Delta-Mendota Canal right-of-way.

15. That the applicant shall coordinate with the local electrical service provider (TID) to ensure adequate electrical service is available to all parcels. Additional Public Utility Easements (PUEs) and/or electrical easements shall be granted as required where existing or proposed electrical facilities extend beyond established easement areas or cross parcel boundaries. All required easements shall be shown on the final map or recorded prior to issuance of improvement or building permits.

16. That future development of the subdivided parcels shall comply with the City of Patterson General Plan, zoning regulations, and all applicable development standards. Specific land uses allowed within the boundaries of this subdivision shall be limited to retail, visitor services, lodging, recreation, amusement/entertainment, restaurants, auto sales (with ancillary services), and other related uses

determined through subsequent development applications and any required discretionary permits in accordance with the Patterson Municipal Code.

17. That, per Patterson Municipal Code Section 16.20.010, failure to record a final map within twenty-four months of the date of approval or conditional approval of the tentative map shall terminate all proceedings, unless otherwise provided for under the Subdivision Map Act; provided, however, that upon application of the subdivider in writing, an extension not exceeding one year may be granted by the planning commission, except as provided under subsections (B) and (C) of this section. In the event the commission denies the subdivider's application for extension, the subdivider may appeal to the city council. Where proceedings have terminated because of failure to file a final map or failure to receive extension by the planning commission or city council, a new tentative map shall be filed in accordance with the provisions of this chapter before a final map may thereafter be recorded or any lot sold.

18. That the applicant shall indemnify, defend and hold harmless the City of Patterson, its agents, officers and employees from any and all claims, actions, or proceedings against the City of Patterson, its agents, officers and employees to attack, set aside, void, or annul any approval by the City of Patterson and its advisory agency, appeal board or legislative body concerning the project, which action is brought within the time period provided for by the Government Code of the State of California. The City of Patterson shall promptly notify the applicant of any claim, action or proceeding and shall cooperate fully in the defense. If the City fails to do so, the applicant shall not thereafter be responsible to defend, indemnify or hold the City harmless.

Second: Commissioner Apland
Motion passed: 5-0 Vote

ROLL CALL: Chairperson West, Vice Chairperson Bendix, Commissioner Apland, Commissioner Sidhu, Commissioner Alexander

Ayes: Chairperson West, Vice Chairperson Bendix, Commissioner Apland, Commissioner Sidhu, Commissioner Alexander
Noes: None
Excused: None

2. Public Hearing: **Conditional Use Permit #26-01 – Gold Coast Sales, Inc., Pylon Sign, S. Rogers Road, APN # 021-093-001**
To consider plans for a new pylon and electronic billboard sign and Conditional Use Permit application on property located at the southwest corner of Sperry Avenue and S. Rogers Road, zoned General Commercial District. Project plans illustrate a new 90-foot-high, freeway-oriented sign to be constructed on undeveloped 1.9-acre site (APN 021-093-001) to benefit multiple businesses and properties. The Planning Commission may approve signs over 30 feet high with consideration and potential approval of a Conditional Use Permit.

Community Development Director Stice presented the PowerPoint presentation. He answered questions from the Commission.

Open Public Hearing: 7:43 p.m.

An email was sent by Dominic Speno and he asked that it be read into the record. It reads as follows:

“I am concerned about possible line of sight blockage as it relates to the Villa Del Lago sign that has been in place since the early 1990’s. One exhibit in particular that raised my concern was exhibit “love tc” it appears as though the proposed sign is directly blocking the line of sight for the Villa Del Lago sign. This is my main concern that I would like addressed before any approval is granted. I am not opposed to a sign generally as long as the line of site in relation to the Villa Del Lago sign is not infringed upon. Please enter this response into the record for commissioners to consider”

Steven Martinez from Caltrans emailed the following comment:

“Pursuant to the California Outdoor Advertising Act (Business and Professions Code 5200 et. seq.), any proposed off-premises outdoor advertising display visible from the State Highway System must obtain an ODA Permit from the Caltrans Outdoor Advertising Program prior to placement. For questions regarding permitting requirements or how to apply for an ODA Permit, please e-mail ODA@dot.ca.gov or call (916) 654-6473.”

Frank Orosco, consultant for Project
Mr. Orosco answered questions from the Commission regarding adding community events on the electronic board. Mr. Orosco stated that it would be possible to add information about events. He also stated that originally the sign was supposed to be between Oak Harbor and Love’s and now that the sign location has moved, they’re not opposed to putting the flagstone on the legs of the sign. The sign will only block Villa Del Lago if you’re standing in parking lot looking at Villa del Lago sign but doesn’t block from the freeway. He also stated that McDonald’s won’t close escrow until sign is in place. He stated businesses are waiting for McDonald’s to break ground before other businesses purchase lots. He spoke in favor of the project and answered questions from the Commission.

Larry Buehner
Mr. Buehner stated that of the 90-foot sign 12 feet or so is the M arches. The height from the freeway is elevated and the sign is at a lower elevation. It looks taller from the Love’s parking lot than the freeway.

Sarah Kumar, she and her husband own Grocery Outlet in town
They live here and do business in Patterson. She stated they have struggled with signage and visibility off the freeway. She is in favor of the signage and hopes to be put on the sign for more economic growth in the community.

Sarah Hernandez, Patterson
Miss Hernandez asked when proposed sign images are approved, what process does that lot of land get approved for signage? Community Development Director Stice stated corner lots get more signage front and side like Grocery Outlet. She asked questions about the process when buildings get built. Community Development Director Stice stated that each development is different and financing and environmental issues may play a role in how fast the development starts. Miss Hernandez stated that Grocery Outlet reminds her of the word family because they’re a local family business and although they didn’t need a sign to open, they’ve given a lot back to the community. She said they need an additional sign because she can’t tell what their building is from the freeway.

Close Public Hearing: 8:05 p.m.

Reopen Public Hearing: 8:08 p.m.

Larry Buehner stated that when they put the stone on the sign, they'll match it in the future when the businesses come in. Community Development Director Stice stated that the base would require its own building permit.

Reclose Public Hearing: 8:09 p.m.

Motion to adopt Resolution #2026-01, approving Conditional Use Permit #26-01 with four findings and 20 conditions of approval with addition of condition #21 to state "The applicant shall include a 6-foot-high flagstone base structure located at the base of the sign columns and consistent with designs of the surrounding commercial businesses, subject to review and approval by the city Community Development Director. Additionally, a building permit will be required for such sign base structure if proposed outside of the original sign plans."
By: Vice Chairperson Bendix

Conditions of Approval

1. The project shall comply with all applicable State and Municipal Codes, including the California Building Codes and meet the requirements of the Public Works Department, City Engineer, Building Inspector, Planning Department and Fire Chief.

2. The applicant shall comply with all conditions of approval and adopted mitigation measures.

3. Development shall occur in substantial conformance with the plans as approved by the Planning Commission.

4. All signage shall be submitted for a sign permit and shall be in accordance with relevant provisions of the Patterson Zoning Ordinance and that any proposed monument sign shall be constructed with design elements and materials reflective of those of the main building.

5. The applicant shall include a 6-foot-high flagstone base structure located at the base of the sign columns and consistent with designs of the surrounding commercial businesses, subject to review and approval by the city Community Development Director. Additionally, a building permit will be required for such sign base structure if proposed outside of the original sign plans. (new condition)

Additional Approvals

6. A Caltrans Outdoor Advertising Permit is required where applicable.

7. Approval by the City does not authorize installation or operation of an electronic billboard without all required state permits.

8. Applicants must acknowledge that final approval is contingent upon Caltrans authorization.

Brightness (Luminance) Standards

9. Electronic billboards shall not exceed a maximum brightness of 500 nits from sunset to sunrise.

10. Daytime brightness must be automatically adjusted based on ambient light conditions. Automatic dimming technology is required at all times.

Glare and Safety

11. Electronic billboards shall not produce glare, light spill, or brightness that impairs driver visibility or interferes with traffic control devices.

12. Sign orientation and illumination must be compatible with surrounding land uses.

13. The City retains authority to require modification or temporary shutdown if a sign is deemed unsafe by the Community Development Director or Caltrans.

Message Display and Operation

14. Only static images are permitted.

15. Each message must be displayed for a minimum of eight (8) seconds, with a transition time not exceeding one (1) second.

16. Flashing, scrolling, video, animation, or simulated motion effects are prohibited.

Measurement and Compliance

17. Brightness must be measurable using industry-standard testing methods.

18. Applicants must agree to post-installation testing upon request by the City or Caltrans.

19. Noncompliance may require immediate adjustment or temporary shut-off until corrective actions are implemented.

Regulatory Hierarchy

20. Where local, state, or federal regulations differ, the more restrictive standard shall apply. Compliance with City requirements does not guarantee issuance of a Caltrans Outdoor Advertising Permit. These standards are intended to provide clear expectations for applicants, streamline interagency coordination, and reduce the risk of post-approval conflicts with state and federal highway regulations.

Indemnity

21. The applicant shall agree to defend at his/her sole expense any action brought against the City, its present or former agents, officers, or employees because of the issuance of said approval, or in any way relating to the implementation thereof, or in the alternative, to relinquish such approval. The applicant shall reimburse the City, its agents, officers, or employees, for any court costs and attorney's fees which the City, its agents, officers or employees may be required by a court to pay as a result of such action. The City may, at its sole discretion, participate at its own expense in the defense of any such action but such participation shall not relieve applicant of his/her obligations under this condition.

Second: Commissioner Alexander
Motion passed: 5-0 Vote

ROLL CALL: Chairperson West, Vice Chairperson Bendix, Commissioner Apland, Commissioner Sidhu, Commissioner Alexander

Ayes: Chairperson West, Vice Chairperson Bendix, Commissioner Apland, Commissioner Sidhu, Commissioner Alexander
Noes: None
Excused: None

ITEMS FROM STAFF:

Community Development Director Stice stated that there are lots of different projects going on currently like the development agreements for Zacharias and Del Puerto Health Care District master plan we expect an application from them next month.

ITEMS FROM COMMISSION:

Vice Chairperson Bendix asked if Rogers Road will ever get fixed and if we're still waiting for PG&E. Community Development Director Stice said eventually but that would be questions for the Public Works and Engineering departments. He also asked when Save Mart would get the letter regarding the handicapped parking spaces and Community Development Director Stice said that it was done.

ADJOURNMENT: The Planning Commission regular meeting of February 12, 2026, was adjourned by Chairperson West at 8:12 p.m.

_____
Prepared by Denise Melo, Secretary of City of Patterson Planning Commission

CITY OF PATTERSON
Planning Commission Staff Report
Js Food Court
Conditional Use Permit #24-03
Architectural & Site Plan Review #24-06
March 12, 2026 Meeting

PROJECT SUMMARY

A public hearing to consider Architectural and Site Plan Review and Conditional Use Permit (CUP) approval of a proposed mobile vehicle food court including up to thirteen (13) mobile vehicle spaces, multiple shade structures, and trash facilities at 111 East Las Palmas Ave. (APN 047-033-011).

APPLICANT AND SITE INFORMATION

Applicant/Owner:	**Renu Vagarwal / Anna Gill**
Environmental Review:	**CEQA Exempt Section 15332 – In-Fill Projects**
Location:	**111 E Las Palmas**
Assessor Parcel Numbers:	**047-033-011**
Project Size:	**1.17± Acres**
General Plan Designation:	**Industrial**
Zoning:	**Heavy Industrial**
Present Use:	**Partially undeveloped, auto sales building/lot, limited metal canopy**
Surrounding Land Uses:	**Light Industrial to the north, commercial sales/services to the south, limited residential uses and mobile food vendors to the east and public facilities to the west.**

PROJECT SITE

The subject property is predominantly undeveloped, level and surrounded by existing commercial service buildings. An existing car sales lot and building comprise the project site's southwest area, with street frontage directly along E. Las Palmas Ave. The project site has additional street frontage immediately east of the auto-sales facilities as well as along the east site of N First Street, immediately north of the existing Valero gas station / convenience market.

The site is irregularly shaped, and particularly so with the existing auto sales facilities situated and operating independently of the proposed mobile food court site plan (attached). Ingress access to the site is proposed via a 30-foot-wide easement off of E Las Palmas through the Valero driveway. Ingress *and* egress to the site is proposed along the N First Street frontage north of Valero. The project site borders the north and west boundaries of the small cluster of existing dwellings to the east.

Finally, the easternmost segment of the subject property is directly adjacent to an existing mobile food court, which is also owned by the owner of the subject site. Project plans indicated a small gate along this shared property boundary and could enable pedestrian access to and from both properties.

PROJECT DESCRIPTION AND ANALYSIS

The applicant proposes to improve the undeveloped portions of their property with new asphalt pavement, food truck spaces and utility connections, gazebos, parking, landscaping, fencing and lighting. The mobile food court project is planned to feature up to 13 food trucks / trailers with a variety of food genres. Gazebo structures are illustrated as cluster in two locations: near the site's Las Palmas frontage (east of the auto sales facility); and, in the 43.5-foot by 100-foot segment of the northeast portion of the site.

The project also includes an 878-square-foot addition to the rear (north) side of the existing auto sales building, representing a near doubling of square feet for the auto sales building. The auto sales building becomes square shaped with a stepped flat roof, new rear doorway and windows. As such, it would remain visible on all four sides.

Access Considerations

Ingress access to the proposed mobile food court would be provided off of E Las Palmas Avenue via an access easement that appears to encumber the Valero property. Submitted site plans illustrate a 30-foot-wide easement located somewhere between the Valero market building and their easterly property boundary shared with that of the subject (food court / auto sales) property. Staff has not received documentation validating nor detailing the nature of this easement.

Though the easement is purportedly 30 feet wide, there appears –based on aerial photo measurements– that the area between the Valero building and the auto sales building is only about 20 feet wide. Further complicating this access proposal is a property dispute between the Valero property owner(s) and the owner of this subject property, involving the unauthorized placement of a mobile food vehicle and shade structure, which is the subject of the City's investigation for potential remedies. Existing fence/walls between these two properties are also within the purported/illustrated easement location.

The project proponents and City staff have discussed that any such access into the project site via this shared driveway must be one-way only so as to not exacerbate already complicated traffic congestion at this location. The proponents have agreed to a project condition limiting this access to be one way.

City staff encourage the Planning Commission to consider how the proposed use of the project site might affect the operation of the existing driveway access shared with Valero.

Parking Considerations

Project plans illustrate 38 regular visitor parking spaces, ADA spaces (w/ loading areas) would be required as a condition of potential project approval. Parking spaces as illustrated would meet or exceed the City's minimum standards for sufficient backup space. A slight plan modification may be required to afford additional landscaping and vehicle turning movements in limited locations.

Safety Considerations

The northeastern most (43.5-foot by 100-foot) segment of the project site has limited potential for visibility by the public and first responders. Staff has concerns that this area may attract nefarious activity and create vulnerabilities to unsuspecting visitors.

Vehicle trips at the Valero driveway entrance (into the project site) would increase and, thereby, increase the potential for vehicular congestion and conflicts in that location.

Design Considerations

Project plans do not indicate any specific type of design, architectural, or signage theme that would otherwise be provided throughout the project site as typically the case with traditional new development. As a result, the project's appearance, atmosphere, entryway(s) and ambiance would be limited with little (if any) ability by the City to ensure or enforce a more attractive appearance.

Metal gazebos measuring approximately 12x20 feet are illustrated within the project plans to provide seating and shelter from the natural elements. These reach approximately 94 inches high with corrugated metal roof, supported by metal posts and beams. Metal tube fencing and gates would line the perimeter of the project site, consistent with City standards.

Landscaping Considerations

No plans for landscaping were submitted with the project proposal. The project site plan illustrates landscape "buffers" around some of the project site's boundaries. Conditions of potential project approval would require landscape improvement plans to further improve the site, perimeter, parking areas, and trash enclosure with landscaping.

Land Use Considerations

The site is located within and adjacent to the Heavy Industrial District. Commercial services, including mobile food vendors, are well established and growing within this (E Las Palmas Ave.) portion of the Heavy Industrial District. The City has allowed some mobile food vendor businesses withing this District (in limited cases) following conditional use permit review by the Planning Commission.

With sufficient conditions, the proposed food court business is generally compatible with this district. One area of incompatibility may be where existing dwellings are established approximately 10 feet from the project site's east boundary. It is possible and conceivable that operation of a new additional food court in such close proximity could create conflicts with the residents.

ENVIRONMENTAL REVIEW

CEQA Guidelines Section 15332 (In-Fill Development) provides an exemption to the State California Environmental Quality Act requirements for projects that are characterized as in-fill development meeting the following conditions:

A. The project is consistent with the applicable general plan designation and all applicable general plan policies as well as with applicable zoning designation and regulations.
B. The proposed development occurs within city limits on a project site of no more than five acres substantially surrounded by urban uses.
C. The project site has no value as habitat for endangered, rare or threatened species.
D. Approval of the project would not result in any significant effects relating to traffic, noise, air quality, or water quality.
E. The site can be adequately served by all required utilities and public services.

FINDINGS

In order to approve the Conditional Use Permit application, the Planning Commission must make the following findings per Patterson Municipal Code Chapter 18.18.020 (C):

1. That the development is consistent with the city general plan and the municipal code; and

2. That the establishment, maintenance, or operation of the proposed use or structure will conform to the requirements and the intent of this title; and that such proposed use or structure will not, under the circumstances of the particular case or as conditioned, be injurious or detrimental to the health, safety, or general welfare of persons or property in the vicinity of the proposed use, or to the general welfare of the city.

To approve the Architectural and Site Plan Review, the Planning Commission must make the following findings per Patterson Municipal Code Chapter 18.18.040 (E):

1. The architectural and general appearance of the structures and grounds shall have architectural unity and be in keeping with the character of the neighborhood as not to be detrimental to the orderly and harmonious development of the city, or to the desirability of investment or occupation in the neighborhood.

2. The site plan is consistent with this title, any applicable specific plan, any adopted development standards and design guidelines, and the general plan.

RECOMMENDATION

Planning staff recommend that the Commission should:

1. Conduct a public hearing and allow members of the public to testify;
2. Consider the issues discussed in this report; and
3. Consider one of the three following Alternative Actions (below):

ALTERNATIVE ACTIONS

The Planning Commission is the final decision-making body on this matter unless appealed to the City Council.

1. Approve Conditional Use Permit #24-03 & Architectural & Site Plan Review #24-06 based on the findings and subject to the attached conditions of approval; or

2. Approve Conditional Use Permit #24-03 & Architectural & Site Plan Review #24-06 based on the findings and subject to the attached conditions of approval, <u>with changes/revisions as may be determined by the Commission</u>; or

3. Determine that the proposed Project is not consistent with applicable policy and deny the proposal.

Respectfully submitted,

Bryan Stice

Bryan Stice, Community Development Director

<u>Attachments:</u>
1. Draft Conditions of Approval
2. Project Plans
3. Public Notice

DRAFT CONDITIONS OF APPROVAL

1. The project shall be developed in accordance with the approved site plan and conditions of approval provided below, and applicable State, County, and City codes, and incorporated herein by reference. The project shall consist of the operation of a mobile vehicle food court, consistent with Patterson Municipal Code Chapter 5.10.

2. The project is approved for a maximum of 13 mobile food vehicles. However, the site is preliminarily approved for only ten (10) mobile food vehicles. The site's potential to accommodate the full 13 mobile food vehicles shall depend on the project proponent's ability to adequately provide public safety and parking for the preliminary (10 vehicles) and full (13) food court development. City staff shall and/or the Planning Commission, shall have the discretion to review this conditional use permit and the project's compliance with this and all conditions on an annual basis. Failure to comply with these conditions use permit may result in revocation of this conditional use permit, by the Planning Commission and/or City Council.

3. Should the Community Development Director find the project's operation, performance, appearance or related matters to be inadequate, such items may be referred to the Planning Commission for consideration in relation to maintenance of the conditional use permit.

4. Location and design of the trash enclosure and restroom facilities (if required) shall be subject to review and approval of the Community Development Director, Public Works Director, and City Engineer.

5. All permanent structures shall be subject to a City building permit.

6. Sidewalk improvements shall be required along the N 1st Street and E Las Palmas street frontages, subject to the approval of the City Engineer.

7. ADA access shall be provided throughout the site and through the northwest corner of the site subject to the approval of the City Engineer.

8. The project is subject to the placement of a fire hydrant(s), to the satisfaction of the Fire Chief, or their designated representative.

9. The project shall maintain on-site landscaping consistent with an approved landscaping plan. The applicant shall enter into an agreement with the City that, should the landscaping fall into disrepair, the City may perform maintenance and bill the owner for the work, or place a lien on the property for such work.

10. That a master sign program shall be submitted for review and approval by the Community Development Director. All signage shall be consistent with the master sign program.

11. No temporary tenant flags, banners, wind advertisements, etc. shall be allowed that are not outlined in the master sign program. Violations will be subject to Code Enforcement Actions.

12. A landscape buffer shall be provided between parking areas and mobile food truck areas.

13. Curbs adjacent to the side of parking spaces shall be a minimum of one foot wide.

14. Enhanced landscaping screening shall be provided along E Las Palmas Avenue, subject to review and approval by the Community Development Director.

15. A minimum of one accessible public restroom for men and one for women shall be provided onsite during all hours the mobile food park is in operation. The restroom shall include hand washing facilities.

16. All litter generated shall be picked up within the site prior to closure each day.

17. All mobile food vehicle owners shall obtain a business license from the Finance Department prior to commencing business operations.

18. A copy of the vendor lease agreement shall be provided to the Community Development Department prior to the Community Development Department Staff approving the business license.

19. All food vehicles conducting business within the mobile food court must have a current health permit from the Stanislaus County Department of Environmental Resources.

20. No outdoor amplified sound or loudspeakers shall be permitted. The operation shall at all times comply with the noise limits established in Chapter 6.44 of the Patterson Municipal Code.

21. All mobile food vending shall occur within private property. The mobile food court shall not impede pedestrian or vehicular traffic in the public right of way. The operation shall at all times be conducted in a manner not detrimental to surrounding properties or residents by reason of lights, noise, activities, or other actions. The applicant shall prohibit loitering at the site and shall ensure noise levels do not exceed the City's noise standards.

22. The project site shall be maintained in good, clean, orderly manner, free of any debris or junk materials.

23. The project shall comply with all applicable provisions of the California Code of Regulations Title 24.

24. The project shall comply with all applicable Federal, State and Local codes, ordinances and resolutions.

25. Electricity shall be provided from an approved fused electrical source. If extension cords are used, they shall be a minimum size of 12-gauge wire, having grounding capabilities and be UL (underwriters laboratories) approved for outdoor use. Extension cords shall be in good condition without splices, deterioration or damage and protected from physical damage and shall not create tripping hazards.

26. Class 2-A 10:B:C fire extinguishers shall be located accessible to the location next to each group of food trucks.

27. Gates shall remain open during business hours with appropriate on-site signage is required, subject to review the Fire Department.
28. Gates shall have Knox pad locks with Knox key switches (if applicable).

29. Fire access (including gates) shall be a minimum of 20 feet.

30. Fire access lanes shall be indicated and stripped to maintain emergency access/clearance.

31. The project site shall be paved with materials, a stormwater drainage and treatment system, and permitted subject to review and approval by the City Engineer and Public Works Department.

32. There shall be no discharges of waste/oil/debris into the storm, sewer, or street systems.

33. All improvements within the City's right of way shall be designed and built according to the City standards and specifications for review with an Encroachment Permit Application.

34. During operating hours, all mobile food trucks/trailers shall be unhitched, and towing vehicles shall be parked in marked parking stalls.

35. All mobile food preparation units shall clearly exhibit the name and business address of the person, firm, association, organization, company or corporation of the owner of the unit in accordance with Section 114299 of the California Retail Food Code.

36. The hours of operation will be limited daily to the hours of 8:00am to 11:30pm.

37. The applicant shall obtain an encroachment permit from the Public Works Department for any work conducted within the public right-of-way.

38. The project shall comply with all applicable State and Municipal Codes, and meet the requirements of the Public Works Director, City Engineer, Building Official, Community Development Director, and Fire Chief. Plans submitted for construction shall be overprinted or have attached all conditions of approval.

39. That the applicant shall indemnify, defend, and hold harmless the City of Patterson, its agents, officers, and employees from any and all claims, actions, or proceedings against the City of Patterson, its agents, officers and employees to attack, set aside, void, or annul, any approval by the City of Patterson and its advisory agency, appeal board, or legislative body concerning the project, which action is brought within the time period provided for by the Government Code of the State of California. The City of Patterson shall promptly notify the applicant of any claim, action or proceeding and shall cooperate fully in the defense. If the City fails to do so, the applicant shall not thereafter be responsible to defend, indemnify or hold the City harmless.

40. That access and temporary parking between mobile food vehicle spaces is prohibited to unauthorized vehicles; and that such access and temporary parking is strictly limited to only vehicles operated by emergency personnel, authorized space leaseholders, and property maintenance staff. Prior to issuance of a City of Patterson Flatwork Permit, the owner shall submit signage and improvement plans that label and illustrate such restricted access, subject to review and approval by the City of Patterson Fire Marshall and Community Development Director.

41. Prior to improvement plan submittal, the applicant shall submit a current title report and evidence of the access agreement across the Valero property.

PROPERTY OWNER DATA

ANNA GILL
111 E LAS PALMAS AVENUE
PATTERSON ,CA 95363

REPRESENTATIVE

JASDEEP KAUR
DESIGNERS CONSORTIUM
PHONE :- 559-313-8444
EMAIL :-
DESIGNERSCONSORTIUM559@GMAIL.COM

DEVELOPMENT AGENCY

CITY OF PATTERSON
1 PLAZA P.O BOX 667
PATTERSON ,CA 95363

SCOPE OF WORK

1. PROPOSED 6'-0" HIGH TUBULAR STEEL FENCE ON EXISTING SITE.

APPLICABLE CODES

EFFECTIVE JANUARY 1, 2023
PUBLIC SAFETY, STATE FIRE MARSHAL REGULATIONS
2022 BUILDING STANDARDS ADMINISTRATIVE CODE
2022 CALIFORNIA BUILDING CODE, VOL. 1 & 2 (CBC)
2022 CALIFORNIA ELECTRICAL CODE, (CEC)
2022 CALIFORNIA MECHANICAL CODE, (CMC)
2022 CALIFORNIA PLUMBING CODE (CPC)
2022 CALIFORNIA ENERGY CODE
2022 CALIFORNIA FIRE CODE (CFC)
2022 CALIFORNIA GREEN BUILDING STDS CODE
2022 CALIFORNIA REFERENCED STANDARDS

DESIGN CRITERA

1. ALL WORK AND MATERIALS SHALL BE PERFORMED AND INSTALLED IN COMPLIANCE WITH THE LATEST EDITION OF THESE CODES, STANDARDS, REFERENCES, ETC., AS ADOPTED AND MODIFIED BY THE AUTHORITY HAVING JURISDICTION. CONTRACTOR AND/OR SUB-CONTRACTORS SHALL MAKE THEMSELVES AWARE OF THESE CODES, STANDARDS, REFERENCES, ETC. NOTIFY THE ARCHITECT/ENGINEER OF ANY DISCREPANCIES BETWEEN THESE DRAWINGS AND/OR SPECIFICATIONS PRIOR TO ORDERING AND/OR INSTALLING OF THEIR WORK PRODUCT. NOTHING IN THESE PLANS IS TO BE CONSTRUED TO PERMIT WORK NOT CONFORMING TO THE CODES LISTED ABOVE.

2. ALL WORK SHALL CONFORM TO THE BEST INDUSTRY STANDARDS AND MATERIALS SHALL BE NEW, FIRST QUALITY, INSTALLED IN STRICT ACCORDANCE OF THE MANUFACTURERS INSTRUCTIONS AND RECOMMENDATIONS. ALL STANDARDS PROVIDED AND WORK PERFORMED MUST CONFORM AND/OR BE ADJUSTED TO CONFORM WITH ANY AND ALL APPLICABLE CODES.

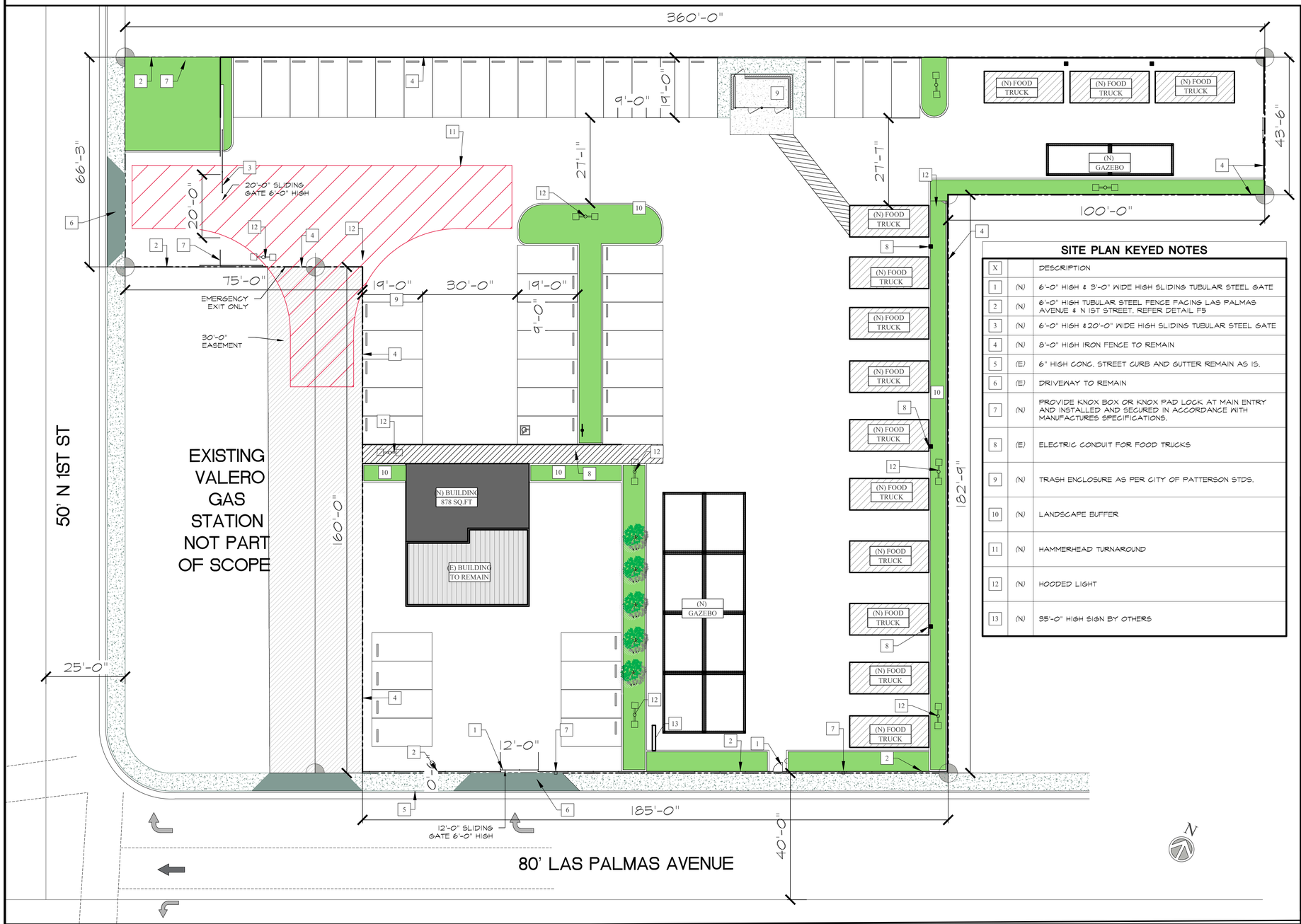

SITE PLAN KEYED NOTES

X		DESCRIPTION
1	(N)	6'-0" HIGH & 3'-0" WIDE HIGH SLIDING TUBULAR STEEL GATE
2	(N)	6'-0" HIGH TUBULAR STEEL FENCE FACING LAS PALMAS AVENUE & N 1ST STREET. REFER DETAIL F5
3	(N)	6'-0" HIGH &20'-0" WIDE HIGH SLIDING TUBULAR STEEL GATE
4	(N)	8'-0" HIGH IRON FENCE TO REMAIN
5	(E)	6" HIGH CONC. STREET CURB AND GUTTER REMAIN AS IS.
6	(E)	DRIVEWAY TO REMAIN
7	(N)	PROVIDE KNOX BOX OR KNOX PAD LOCK AT MAIN ENTRY AND INSTALLED AND SECURED IN ACCORDANCE WITH MANUFACTURES SPECIFICATIONS.
8	(E)	ELECTRIC CONDUIT FOR FOOD TRUCKS
9	(N)	TRASH ENCLOSURE AS PER CITY OF PATTERSON STDS.
10	(N)	LANDSCAPE BUFFER
11	(N)	HAMMERHEAD TURNAROUND
12	(N)	HOODED LIGHT
13	(N)	35'-0" HIGH SIGN BY OTHERS

PROPOSED SITE PLAN
SCALE: 1/16"=1'-0"

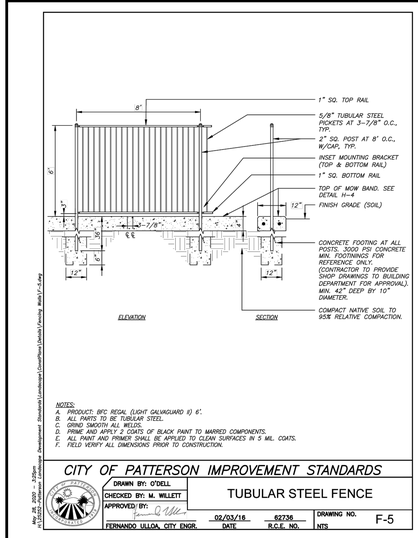

NOTES:
A. PRODUCT: BFC REGAL (LIGHT GALVAGUARD II) 6'.
B. ALL PARTS TO BE TUBULAR STEEL.
C. GRIND SMOOTH ALL WELDS.
D. PRIME AND APPLY 2 COATS OF BLACK PAINT TO MARRED COMPONENTS.
E. ALL PAINT AND PRIMER SHALL BE APPLIED TO CLEAN SURFACES IN 5 MIL. COATS.
F. FIELD VERIFY ALL DIMENSIONS PRIOR TO CONSTRUCTION.

CITY OF PATTERSON IMPROVEMENT STANDARDS

DRAWN BY: O'DELL	TUBULAR STEEL FENCE		
CHECKED BY: M. WILLETT			
APPROVED BY:	02/03/16	62736	DRAWING NO. F-5
FERNANDO ULLOA, CITY ENGR.	DATE	R.C.E. NO.	NTS

F5 TUBULAR STEEL FENCE
SCALE: N.T.S.

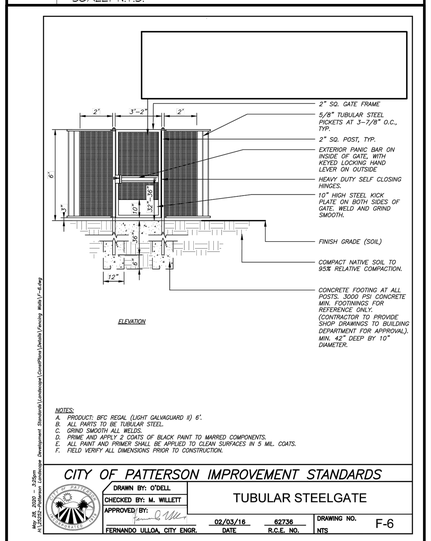

NOTES:
A. PRODUCT: BFC REGAL (LIGHT GALVAGUARD II) 6'.
B. ALL PARTS TO BE TUBULAR STEEL.
C. GRIND SMOOTH ALL WELDS.
D. PRIME AND APPLY 2 COATS OF BLACK PAINT TO MARRED COMPONENTS.
E. ALL PAINT AND PRIMER SHALL BE APPLIED TO CLEAN SURFACES IN 5 MIL. COATS.
F. FIELD VERIFY ALL DIMENSIONS PRIOR TO CONSTRUCTION.

CITY OF PATTERSON IMPROVEMENT STANDARDS

DRAWN BY: O'DELL	TUBULAR STEELGATE		
CHECKED BY: M. WILLETT			
APPROVED BY:	02/03/16	62736	DRAWING NO. F-6
FERNANDO ULLOA, CITY ENGR.	DATE	R.C.E. NO.	NTS

F-6 TUBULAR STEEL GATE
SCALE: N.T.S.

Design Consortium
designersconsortium559@gmail.com

PROJECT
PROPOSED " J's FOOD COURT"
AT EXISTING SITE FOR ANNA GILL
111 E LAS PALMAS
PATTERSON, CA 95363
APN: 047-033-011

PLANNING SUBMITTAL

PLAN CHECK SUBMITTAL

REVISION

PROJECT NO.	24-15
SCALE	1/16"=1'-0"
DRAWN BY: JAS	2024-03-27

A1.1

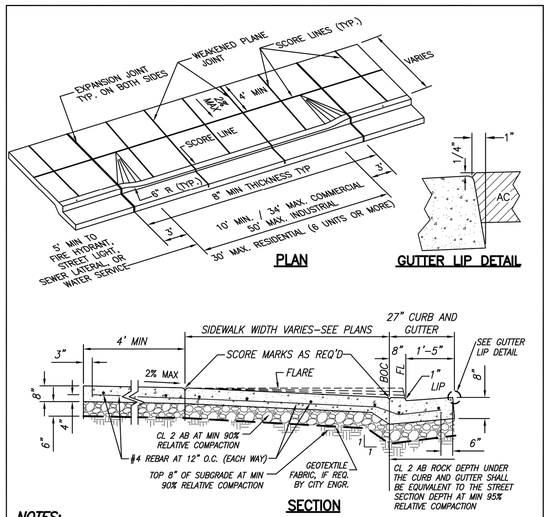

NOTES:

1. SEE NOTES ON STANDARD DETAIL S–17.
2. WHEN NEW APPROACH IS POURED AGAINST EXISTING CONCRETE A 1/2" INCH EXPANSION JOINT SHALL BE PLACED AGAINST EXISTING CONCRETE.
3. SIDEWALK, VERTICAL CURB AND GUTTER SHALL BE CONSTRUCTED PER CITY STANDARDS.
4. EXISTING COMMERCIAL DRIVEWAYS MAY NEED TO BE MODIFIED TO CONFORM TO NEW ELEVATION OF RETROFIT.
5. ANY UTILITY BOX OR LIDS IN DRIVEWAY OR WITHIN 5 FEET OF THE LIMITS OF THE DRIVEWAY SHALL BE TRAFFIC–RATED.

CITY OF PATTERSON IMPROVEMENT STANDARDS

DRAWN BY: J. MANGAT
CHECKED BY: M. WILLETT
APPROVED BY: FERNANDO ULLOA, CITY ENGR. — DATE 10/26/20 — R.C.E. NO. 62736
COMMERCIAL DRIVEWAY
DRAWING NO. S - 37
NTS

Oct 27, 2020 – 7:41am
L:\Standard details\Cad Files 2019\Section 3 (Streets)\S-37.dwg

S-37 COMMERCIAL DRIVEWAY

SCALE: N.T.S.

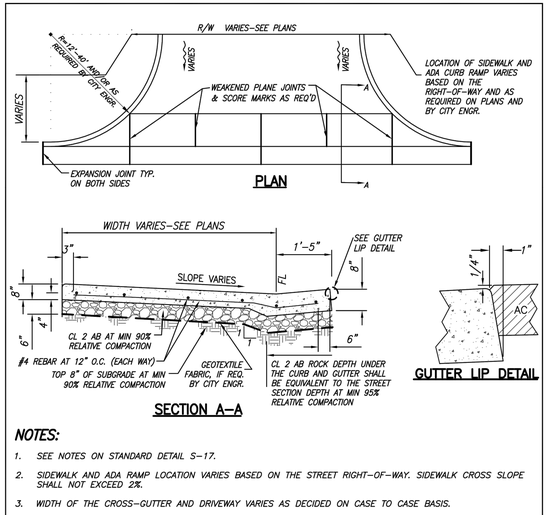

NOTES:

1. SEE NOTES ON STANDARD DETAIL S–17.
2. SIDEWALK AND ADA RAMP LOCATION VARIES BASED ON THE STREET RIGHT–OF–WAY. SIDEWALK CROSS SLOPE SHALL NOT EXCEED 2%.
3. WIDTH OF THE CROSS–GUTTER AND DRIVEWAY VARIES AS DECIDED ON CASE TO CASE BASIS.
4. RADIUS OF THE CURB VARIES AS REQUIRED FOR ADA RAMP, AND EXISTING RIGHT–OF–WAY.
5. WHEN NEW APPROACH IS POURED AGAINST EXISTING CONCRETE A 1/2" INCH EXPANSION JOINT SHALL BE PLACED AGAINST EXISTING CONCRETE.
6. SIDEWALK, VERTICAL CURB AND GUTTER SHALL BE CONSTRUCTED PER CITY STANDARDS.
7. EXISTING COMMERCIAL DRIVEWAYS MAY NEED TO BE MODIFIED TO CONFORM TO NEW ELEVATION OF RETROFIT.
8. ANY UTILITY BOX OR LIDS IN DRIVEWAY OR WITHIN 5 FEET OF THE LIMITS OF THE DRIVEWAY SHALL BE TRAFFIC–RATED.
9. ANY PAVEMENT IN CITY RIGHT–OF–WAY SHALL BE REINFORCED CONCRETE AND CURB SHALL BE REINFORCED 5' BEYOND THE END OF CURB RETURN.

CITY OF PATTERSON IMPROVEMENT STANDARDS

DRAWN BY: J. MANGAT
CHECKED BY: M. WILLETT
APPROVED BY: FERNANDO ULLOA, CITY ENGR. — DATE 10/26/20 — R.C.E. NO. 62736
INDUSTRIAL/COMMERCIAL DRWY. WITH CURB RETURNS
DRAWING NO. S - 38
NTS

Oct 27, 2020 – 7:42am
L:\Standard details\Cad Files 2019\Section 3 (Streets)\S-38.dwg

S-38 COMMERCIAL DRWY WITH CURB RETURNS

SCALE: N.T.S.

NOTES: CONCRETE CURB, GUTTER AND SIDEWALK CONSTRUCTION

1. CONTRACTOR SHALL SECURE AN ENCROACHMENT PERMIT FROM THE CITY AND CALL UNDERGROUND SERVICE ALERT.
2. CURB, GUTTER AND SIDEWALK CONSTRUCTION SHALL CONFORM TO SECTION 73 OF STATE STANDARD SPECIFICATIONS, EXCEPT AS MODIFIED HEREIN.
3. REFERENCE IS MADE TO THE CITY OF PATTERSON DESIGN GUIDELINES SECTION 3 "STREETS" FOR ADDITIONAL REQUIREMENTS RELATING TO THE DESIGN AND CONSTRUCTION OF CONCRETE CURB, GUTTER AND SIDEWALK.
4. 4 INCHES OF CLASS 2 AGGREGATE BASE 95% COMPACTION AND TOP 8 INCHES OF SUBGRADE SHALL BE COMPACTED TO A MINIMUM RELATIVE COMPACTION OF 90% PER ASTM D1557 FOR CURB, GUTTER AND SIDEWALKS.
5. ALL RADII FOR ROUNDING EDGES SHALL BE 3/4" UNLESS NOTED.
6. CONCRETE SHALL BE CLASS B PER STATE STANDARD SPECIFICATIONS SECTION 90, 6 SACK OF CEMENT PER CUBIC YARD AND SHALL PROVIDE 3000 PSI STRENGTH AT 28 DAYS WITH 4 INCH SLUMP. ADD 1 LB. LAMP BLACK PER CUBIC YARD FOR ALL FLAT WORK INCLUDING MONOLITHIC SIDEWALK. ADJUST QUALITY OF LAMP BLACK TO MATCH ADJACENT CONCRETE FOR REPAIR OF EXISTING SIDEWALK.
7. CURB, GUTTER, AND SIDEWALK SHALL HAVE A LIGHT BROOM FINISH; CURB AND GUTTER PARALLEL TO FLOWLINE AND SIDEWALKS PERPENDICULAR TO FLOWLINE.
8. DEPRESS 2" HIGH LETTERS "I", "W", "NP" OR "S" 1/4" DEEP INTO THE CURB TO IDENTIFY SERVICE LOCATIONS.
9. EXPANSION JOINTS AND CONTRACTION JOINTS (WEAKENED PLANE JOINTS) SHALL BE INSTALLED AS INDICATED ON PLANS. 1/2" EXPANSION JOINTS SHALL BE CONSTRUCTED AT ENDS OF CURB RETURNS, AT BOTH ENDS OF DRIVEWAY, AROUND LIGHT POLES, FIRE HYDRANTS, CATCH BASINS, AND OTHER FIXED OBJECTS IN SIDEWALK; AND INTERVALS NOT TO EXCEED 200 FEET.
10. 1–1/2 INCH DEEP CONTRACTION JOINTS (WEAKENED PLANE JOINTS) SHALL BE CONSTRUCTED AT 10 FEET MAXIMUM INTERVALS EXTENDING THROUGH CURB AND GUTTER AND 3/8 INCH DEEP TRANSVERSE SCORE LINES AT THE INTERVALS OF 5 FEET IN SIDEWALK ONLY.
11. LONGITUDINAL SCORE MARK ALONG CENTER OF SIDEWALK IS REQUIRED WHEN SIDEWALK IS 6' OR MORE IN WIDTH.
12. ANY CURB, GUTTER AND SIDEWALK AREA TO BE REPLACED SHALL BE DOWELLED TO EXISTING CURB, GUTTER AND SIDEWALK PER STANDARD DETAIL S–27.
13. IF CURB, GUTTER AND SIDEWALK ARE NOT POURED MONOLITHICALLY, NEW IMPROVEMENTS SHALL BE DOWELLED TO EXISTING AS PER STANDARD DETAIL S–27.
14. REMOVAL OF EXISTING SIDEWALK, CURB OR GUTTER TO BE MADE TO NEAREST SCORE LINE OR DEEP JOINT.
15. CITY SHALL APPROVE SUBGRADE PREPARATION PRIOR TO PLACEMENT OF CONCRETE.
16. ANY UTILITY BOX AND LID LOCATED WITHIN THE LIMITS OF THE DRIVEWAY SHALL BE TRAFFIC–RATED.
17. DURING CONSTRUCTION OF GUTTER, WATER SHALL BE USED TO INSURE PROPER DRAINAGE ALONG THE FLOWLINE.
18. SOIL CONDITIONS AND/OR CITY ENGINEER MAY REQUIRE LIME TREATED SUBGRADE, IF REQUIRED, AREA OF LIME TREATMENT SHALL EXTEND TO 1 FEET BEYOND THE BACK OF THE SIDEWALK.
19. MOISTURE BARRIER IS REQUIRED WHERE SIDEWALK AND STREET SECTION IS POURED ADJACENT TO LANDSCAPING AND/OR IF REQUIRED BY THE CITY ENGINEER. IT SHALL BE 14 MIL. THICK PLASTIC SHEET LINER EXTENDING FULL LENGTH SHOULD BE PLACED 24 INCHES DEEP MINIMUM.
20. IN HEAVY CLAY SOILS AND WHERE TREE TRUNK IS WITHIN 8' OF SIDEWALK, STREET SECTION OR ANY OTHER CONCRETE STRUCTURE, 24 INCHES DEEP ROOT BARRIER SHALL BE INSTALLED ALONG FOR A LENGTH OF 5 FEET EACH DIRECTION FROM TREE.
21. 18" WIDE BAND OF PAVEMENT SHALL BE REMOVED AND REPLACED WHEN NEW CURB AND GUTTER IS TO BE INSTALLED ON AN EXISTING STREET.
22. CITY APPROVED EVAPORATION REDUCERS SHALL BE APPLIED IMMEDIATELY AFTER INITIAL FINISHING AND CURING AGENTS SHALL BE APPLIED AFTER FINAL FINISHING.

CITY OF PATTERSON IMPROVEMENT STANDARDS

DRAWN BY: J. MANGAT
CHECKED BY: M. WILLETT
APPROVED BY: FERNANDO ULLOA, CITY ENGR. — DATE 10/26/20 — R.C.E. NO. 62736
CONCRETE CURB, GUTTER, AND SIDEWALK CONSTRUCTION NOTES
DRAWING NO. S - 17
NTS

Oct 26, 2020 – 4:04pm
L:\Standard details\Cad Files 2019\Section 3 (Streets)\S-17, S-18.dwg

S-17 CONCRETE CURB, GUTTER AND SIDEWALK CONSTRUCTION NOTES

SCALE: N.T.S.

TRASH ENCLOSURE NOTES:

1. THE DESIGN OF THE TRASH ENCLOSURE SHALL INCORPORATE THE SAME MATERIALS AND ARCHITECTURAL INTEREST USED IN THE DESIGN OF THE PRIMARY BUILDING FOR A COORDINATED LOOK AND FEEL THE DEVELOPMENT.
2. WASTE BINS TO BE SIZED TO ACCOMMODATE PROPERTY WASTE, RECYCLING AND ORGANIC WASTE. THE DETAIL SHOWN HERE IS FOR TWO 4 YARD BINS ONLY.
3. FOOD RELATED FACILITIES MUST PROVIDE A GREASE COLLECTION RECEPTACLE.
4. WASTE BINS SHALL BE CONFIGURED TO ALLOW FULL ACCESS TO THE FRONT OF THE BIN.
5. CURBS, 6" MIN WIDTH AND 8" MIN HEIGHT, CAN BE INSTALLED AROUND ALL INTERIOR WALLS TO PREVENT STRUCTURAL DAMAGE FROM BIN LOADING.
6. SCREEN/BARRIER CAN BE INSTALLED TO PREVENT ILLEGAL DUMPING AND IS REQUIRED IF OPEN SPACE BETWEEN WALL AND ROOF IS GREATER THAN 1.5'.
7. IRRIGATED LANDSCAPE STRIP, 5' MIN. WIDTH, WITH PLANTED VEGETATION WITH CLIMBING VINES TO SHIELD ENCLOSURE WALLS REQUIRED IF ENCLOSURE IS VISIBLE FROM ROADWAY.
8. GRADING AROUND THE ENCLOSURE SHALL BE DESIGNED TO DRAIN STORMWATER AWAY FROM THE ENCLOSURE AT A 1% TO 2% SLOPE. THE INTERIOR ENCLOSURE PAD SHALL BE GRADED SUCH THAT NO RUNOFF OCCURS FROM INSIDE THE PAD.
9. ENCLOSURES SERVICING FOOD SERVICE FACILITIES ARE REQUIRED TO HAVE A HOSE BIB. ENCLOSURE PAD SURFACE OF ENCLOSURES WITH A HOSE BIB SHALL SLOPE AT A 1% TO 2% TO AN INTERIOR FLOOR DRAIN CONNECTED TO THE SANITARY SEWER INTERCEPTOR AND SHALL COMPLY WITH ALL OTHER REQUIREMENTS OF HEALTH DEPARTMENT.
10. IF HOSE BIB IS USED PROVIDE CAGE, BUMPER, OR OTHER PROTECTION.
11. DIRECT ROOF DRAINAGE TO STORMWATER CONTROL MEASURE OR LANDSCAPED AREA.
12. PEDESTRIAN ACCESS GATE ON THE SIDE OR THE BACK OF ENCLOSURE SHALL BE PROVIDED, NOT IN THE DIRECT SIGHT OF CUSTOMERS AND NOT VISIBLE FROM ROADWAY.
13. PARKING SHALL BE PROHIBITED IN DOOR SWING AREA AND IT SHALL BE STRIPED AS PER CITY OF PATTERSON STANDARDS.
14. ROOF SHALL BE MINIMUM 20 GAUGE METAL ROOF DECK PRIME AND PAINTED BOTH PACES TO MATCH THE BUILDING.
15. TRASH ENCLOSURE SIZE AND DESIGN CAN BE CHANGED WITH THE APPROVAL OF THE CITY ENGINEER. MATERIAL SUBMITTALS SHALL BE SUBMITTED TO ENGINEERING DEPARTMENT FOR REVIEW.
16. LIGHTNING INSIDE AND AROUND THE AREA OF THE TRASH ENCLOSURE MUST BE INSTALLED WITH MOTION SENSOR.
17. AN ACCESSIBLE PATH OF TRAVEL SHALL BE PROVIDED FROM MAIN BUILDING TO THE PEDESTRIAN DOOR.
18. IF POSSIBLE, DIRECT ACCESS TO THE COLLECTION TRUCK SHALL BE PROVIDED SO THAT TRUCK CAN DRIVE STRAIGHT UP TO THE FRONT OF THE ENCLOSURE FOR SERVICING.
19. THE GATE DOORS MUST BE CONSTRUCTED WITH A MECHANISM THAT WILL PROVIDE A MEANS OF SECURING THE GATE DOORS IN BOTH AN OPENED AND CLOSED POSITION.
20. ALL GATES MUST BE LOCKABLE USING A STANDARD PADLOCK.

CITY OF PATTERSON IMPROVEMENT STANDARDS

DRAWN BY: J. MANGAT
CHECKED BY: M. WILLETT
APPROVED BY: FERNANDO ULLOA, CITY ENGR. — DATE 10/26/20 — R.C.E. NO. 62736
TRASH ENCLOSURE NOTES
DRAWING NO. TE - 1
NTS

Oct 26, 2020 – 8:16am
L:\Standard details\Cad Files 2020\Section 10 (Parking)\TE-1.dwg

TE-1 TRASH ENCLOSURE NOTES

SCALE: N.T.S.

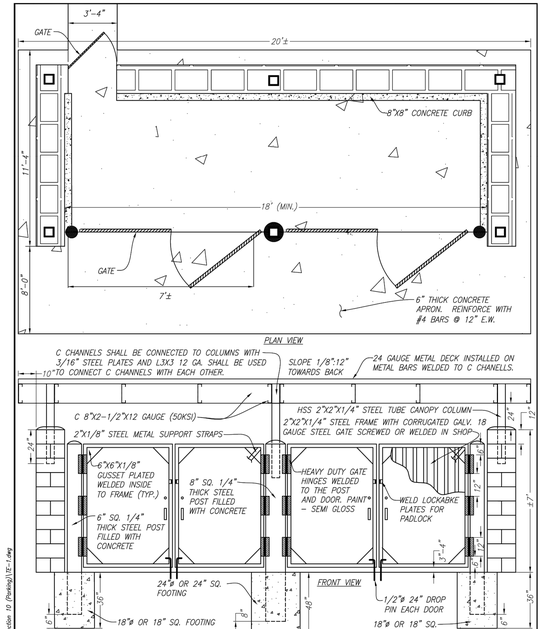

CITY OF PATTERSON IMPROVEMENT STANDARDS

DRAWN BY: J. MANGAT
CHECKED BY: M. WILLETT
APPROVED BY: FERNANDO ULLOA, CITY ENGR. — DATE 10/26/20 — R.C.E. NO. 62736
TRASH ENCLOSURE DETAIL
DRAWING NO. TE - 2
NTS

Oct 26, 2020 – 8:17am
L:\Standard details\Cad Files 2020\Section 10 (Parking)\TE-1.dwg

TE-2 TRASH ENCLOSURE DETAILS

SCALE: N.T.S.

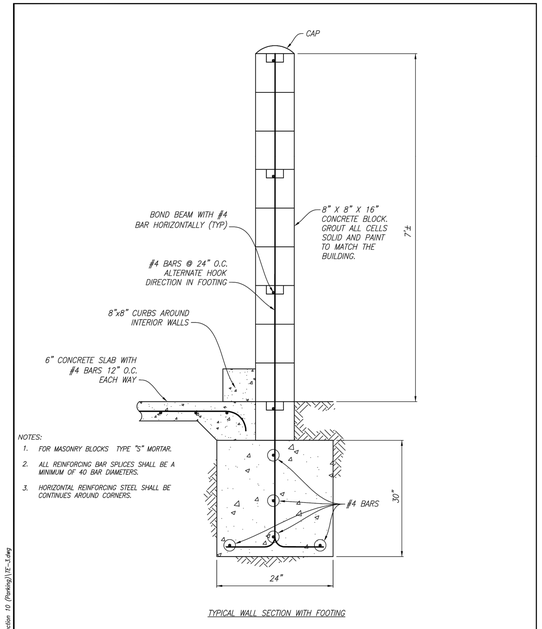

CITY OF PATTERSON IMPROVEMENT STANDARDS

DRAWN BY: J. MANGAT
CHECKED BY: M. WILLETT
APPROVED BY: FERNANDO ULLOA, CITY ENGR. — DATE 10/26/20 — R.C.E. NO. 62736
TRASH ENCLOSURE DETAILS
DRAWING NO. TE - 3
NTS

Oct 26, 2020 – 8:18am
L:\Standard details\Cad Files 2020\Section 10 (Parking)\TE-1.dwg

TE-3 TRASH ENCLOSURE DETAILS

SCALE: N.T.S.

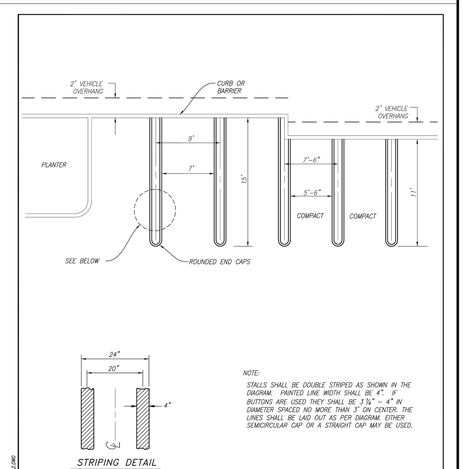

CITY OF PATTERSON IMPROVEMENT STANDARDS

DRAWN BY: J. MANGAT
CHECKED BY: M. WILLETT
APPROVED BY: FERNANDO ULLOA, CITY ENGR. — DATE 10/26/20 — R.C.E. NO. 62736
TYPICAL PARKING STALL STRIPING
DRAWING NO. PA - 2
NTS

Oct 26, 2020 – 8:19am
L:\Standard details\Cad Files 2020\Section 10 (Parking)\PA-2.DWG

PA-2 TYP. PARKING STALL STRIPING

SCALE: N.T.S.

Design Consortium
designconsortium559@gmail.com

PROJECT
PROPOSED " J's FOOD COURT"
AT EXISTING SITE FOR ANNA GILL
111 E LAS PALMAS
PATTERSON, CA 95363
APN: 047-033-011

PLANNING SUBMITTAL

PLAN CHECK SUBMITTAL

REVISION
CITY OF PATTERSON STANDARDS

PROJECT NO. 24-15
SCALE 1/16"=1'-0"
DRAWN BY: JAS
2024-03-27

A1.2

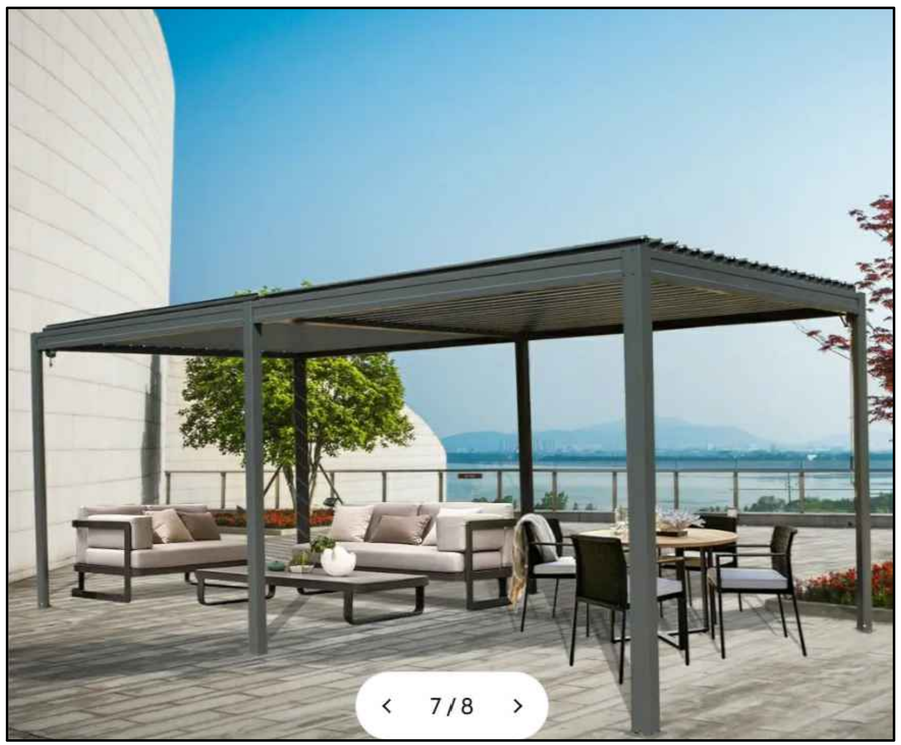

GAZEBO ELEVATIONS

Design Consortium
designconsortium559@gmail.com

PROJECT
PROPOSED " J's FOOD COURT"
AT EXISTING SITE FOR ANNA GILL
111 E LAS PALMAS
PATTERSON, CA 95363
APN: 047-033-011

PLANNING SUBMITTAL

PLAN CHECK SUBMITTAL

REVISION

PROJECT NO. 24-15
SCALE 1/16"=1'-0"
DRAWN BY: JAS 2024-03-27

A1.3

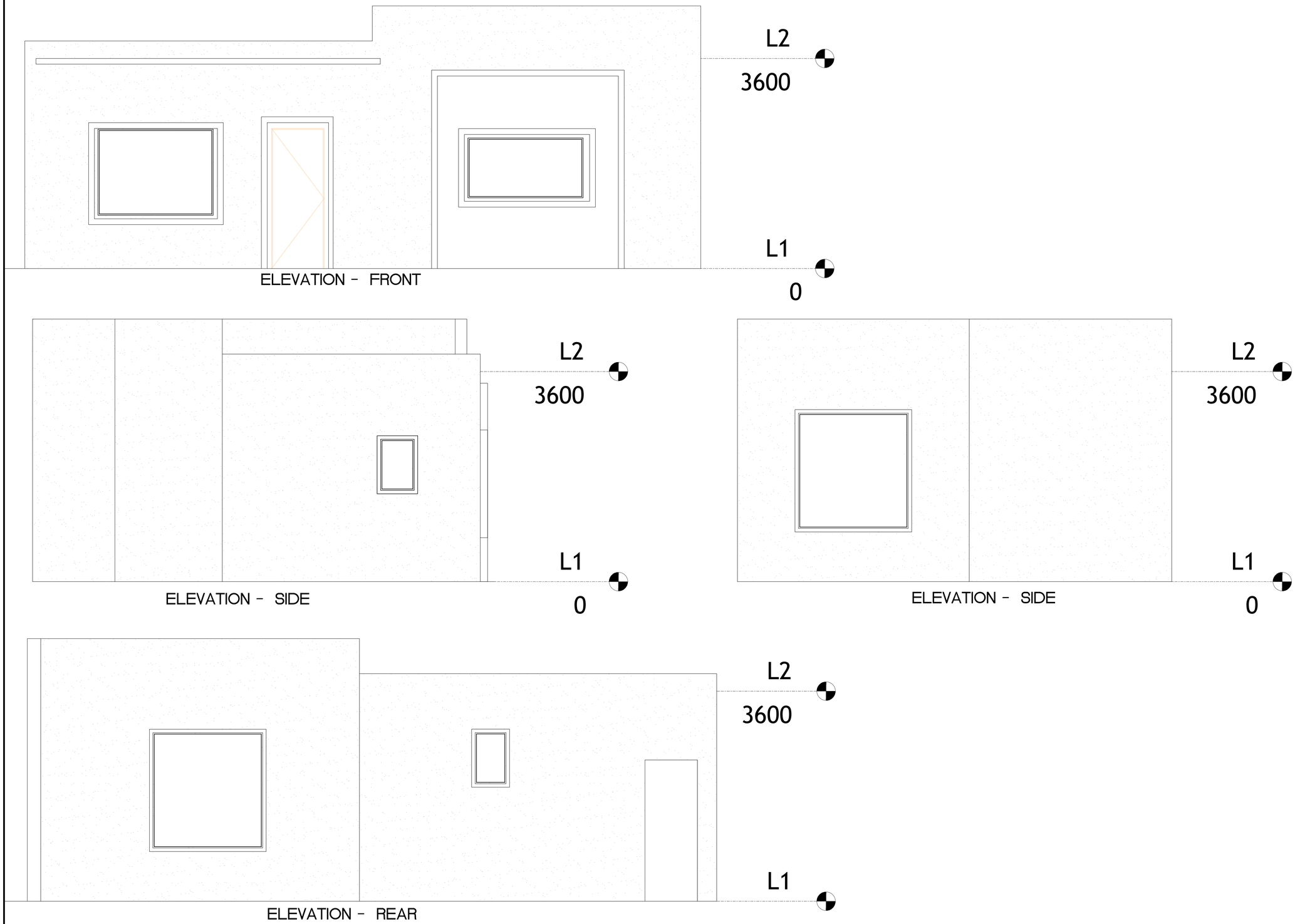

1 ELEVATION - AUTOSALES
SCALE: NTS

Design Consortium
designconsortium559@gmail.com

PROJECT
PROPOSED " J's FOOD COURT"
AT EXISTING SITE FOR ANNA GILL
111 E LAS PALMAS
PATTERSON, CA 95363
APN: 047-033-011

PLANNING SUBMITTAL

PLAN CHECK SUBMITTAL

REVISION

PROJECT NO. 24-15
SCALE 1/16"=1'-0"
DRAWN BY: JAS 2024-03-27

A1.4

NOTICE OF PUBLIC HEARING
CITY OF PATTERSON PLANNING COMMISSION
REGULAR MEETING

NOTICE IS HEREBY GIVEN that the City of Patterson ("City") Planning Commission will hold a Regular Meeting on **Thursday, March 12, 2026, at 7:00 PM,** in the City Council Chambers located at 1 Plaza, Patterson, AND via video conferencing and Zoom teleconference, to consider the following:

Public Hearing: **Architectural & Site Plan Review #24-06, Conditional Use Permit #24-03, 111 E. Las Palmas Avenue, APN #047-033-011 - J's Food Court**
A public hearing to consider Architectural and Site Plan Review and Conditional Use Permit (CUP) approval of a proposed mobile vehicle food court, including up to 13 mobile vehicle spaces, gazebo structures, trash enclosure, parking spaces, and related facilities, at 111 E. Las Palmas Ave (APN 047-033-011), east of 1st St. The southwest portion of the site is developed with an existing auto sales building and car lot. The remainder of the site is undeveloped with two mobile food truck vendors.

NOTICE: THIS MEETING WILL BE PHYSICALLY OPEN TO THE PUBLIC. ALL MEMBERS OF THE PUBLIC MAY ALSO PARTICIPATE IN THE MEETING VIA **VIDEO CONFERENCING AND ZOOM TELECONFERENCE BY CALLING 1-669-900-6833, MEETING ID: 701-906-1477, PASSWORD: 20995363.** JOIN FROM A PC, MAC, IPAD, IPHONE, OR ANDROID DEVICE BY USING THIS URL:

https://us06web.zoom.us/j/7019061477?pwd=VEIrMTlYdmNZTk53ZitzZUdSZUQxZz09

In compliance with the Americans with Disabilities Act, if you need special assistance to participate in this meeting, please contact the Planning Department at (209) 895-8020. Notification 48 hours prior to the meeting will enable the City to make reasonable arrangements to ensure accessibility to this meeting. [ADA Title II; 28 CFR 35.102-35.104.]

The Planning Commission agenda and supporting public documents are available for viewing at City Hall, Planning Department, 1 Plaza, 2nd Floor, Patterson, California during normal business hours. The Planning Commission agenda and supporting public documents will be available on the City's website www.pattersonca.gov listed under Agenda Center "Planning Commission."

At the above noted time and place, testimony from interested persons will be heard by the Planning Commission and duly considered prior to making a recommendation to the City Council. Any material submitted to the Planning Commission for consideration (photographs, petitions, letters, etc.) will be retained by the City and cannot be returned. If a challenge to the above application is made in court, persons may be limited to raising only those issues they or someone else raised at the Public Hearing.

Lisa Ochoa, Administrative Assistant II
Community Development Department

N 4th St
N 3rd St
J St
N 2nd St
N 1st St
33
I St
N 5th St
N Salado Ave
N Del Puerto Ave
Palmas Ave
W Las Palmas Ave
E Las Palmas Ave
Weber Ave
Tyler Ct
Hoffman Ct
Enrique Way
El Cimino Dr
Franco Way
Paso Felix Dr
Paramata Dr
Sears Dr